* INDICATES A SPECIAL CHARACTERISTIC	Rev No / ZONE	Date	Change	ECN
** INDICATES A SAFETY CHARACTERISTIC	01	26.07.19	WIRE LENGTH ADDED & WIRE CHANGED	
*** INDICATES COMPLIANCE CHARACTERISTIC	02	04.01.20	FULL LENGTH ADDED	
	03	04.01.20	INSULATION RESISTANCE TEST ADDED	
	04	23.06.23	POWER RATING, POWER DISSIPATION FACTOR, THERMAL TIME CONSTANT, STORAGE TEMPERATURE, SPECIAL AND SAFETY CHARACTERISTICS ADDED. RT CHART MODIFIED	

TTPL PART No.	LENGTH (L) (mm)
TNT-10116 L600	60±5
TNT-10116 L151	150±10

01

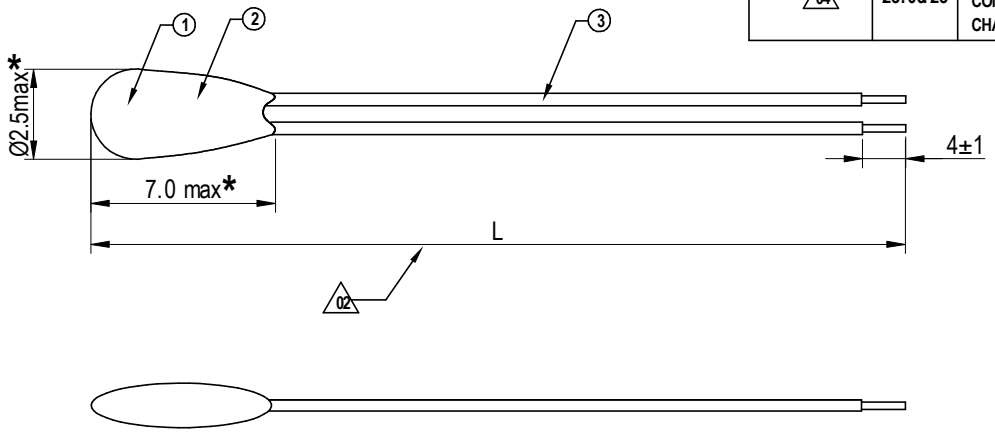

04 CHARACTERISTICS
RESISTANCE vs TEMPERATURE

	T °F	T °C	R(NOM) Ω		T °F	T °C	R(NOM) Ω
*	-85.0	-65.0	1182009.0		113.0	45.0	4655.0
	-76.0	-60.0	843971.0		122.0	50.0	3893.0
	-67.0	-55.0	607472.0		131.0	55.0	3270.0
	-58.0	-50.0	441300.0		140.0	60.0	2760.0
	-49.0	-45.0	323700.0		149.0	65.0	2339.0
	-40.0	-40.0	239800.0	*	158.0	70.0	1990.0
	-52.6	-35.0	179200.0		167.0	75.0	1700.0
	-22.0	-30.0	135200.0		176.0	80.0	1458.0
	-13.0	-25.0	102900.0		185.0	85.0	1255.0
	-4.0	-20.0	78910.0		194.0	90.0	1084.0
	14.0	-15.0	61020.0		203.0	95.0	939.3
	0.0	-10.0	47540.0		212.0	100.0	816.8
	23.0	-5.0	37310.0		221.0	105.0	712.6
*	32.0	0.0	29490.0		230.0	110.0	623.5
	41.0	5.0	23460.0		239.0	115.0	547.3
	50.0	10.0	18790.0		248.0	120.0	481.8
	59.0	15.0	15130.0	*	257.0	125.0	425.3
	68.0	20.0	12260.0		266.0	130.0	376.4
*	77.0	25.0	10000.0		275.0	135.0	334.0
	86.0	30.0	8194.0		284.0	140.0	297.2
	95.0	35.0	6752.0		293.0	145.0	265.1
*	104.0	40.0	5592.0		302.0	150.0	237.0

ELECTRICAL SPECIFICATIONS:

1. RESISTANCE @25°C: 10000Ω±0.81% *
2. RESISTANCE @0°C: 29490Ω±0.93% *
3. RESISTANCE @70°C: 1990Ω±0.64% *
4. INSULATION RESISTANCE (AT 25°C) : A MINIMUM OF 1 GΩ @ 100 VOLTS DC IN METALIC BALLS ** 03

NOTE:

1. OPERATING TEMPERATURE: -55 to +90°C **
2. STORAGE TEMPERATURE: -65 to +125°C
3. POWER RATING (AT 25°C): 50mW **
4. POWER DISSIPATION FACTOR >1mW/°C
5. COOLING THERMAL TIME CONSTANT(LIQUID(1 cSt OIL) TO LIQUID(1 cSt OIL)): <1s
   COOLING THERMAL TIME CONSTANT(LIQUID (1 cSt OIL)TO AIR): <10s

04

Sl. No.	TST PART No.	MATERIAL DESCRIPTION
03	RMW-1019-OR	28AWG 7STRANDS KAPTON INSULATED COPPER ALLOY WIRE
02	RMR-1004-BK	BLACK EPOXY POWDER
01	RMC-1007-A	NTC CHIP

01

MATERIAL PART LIST

DATE	ISS	DRN	CHD	APD
23.06.23	05	NK	EPN	SJ
04.01.20	04	SH	SM	SJ
04.01.20	03	SH	SM	SJ
26.07.19	02	SR	--	SJ
10.08.18	01	SR	--	SJ

THERMOSEN TECHNOLOGIES PVT. LTD.

PROJECTION

SCALE	UNITS	SHEET
NTS	mm	1 OF 1

TOLERANCES UNLESS SPECIFIED												
	X.XXX	0.05	OVER	6	30	120	315	1000	2000	ANGLE (°)	
	X.XX	0.10	UP TO	30	120	315	1000	2000	-	RIGHT	1.0
	X.X	0.25	±	2.0	3.0	5.0	10.0	20.0	50.0	OTHER	1.5

The copyright of this Specification / Drawing is the property of THERMOSEN TECHNOLOGIES PVT. LTD and it is issued on the condition that it is not to be copied / reprinted or stored in an electronic retrival system nor its contents disclosed either wholly or in part to any third party without either the consent in writing or with the conditions of a contract with THERMOSEN TECHNOLOGIES PVT.LTD.

PART NO.: TNT-10116 LXXX

PART NAME: THERMISTOR SENSOR ASSEMBLY

DRAWING NO: PD-18081002